SELECT SUPREME
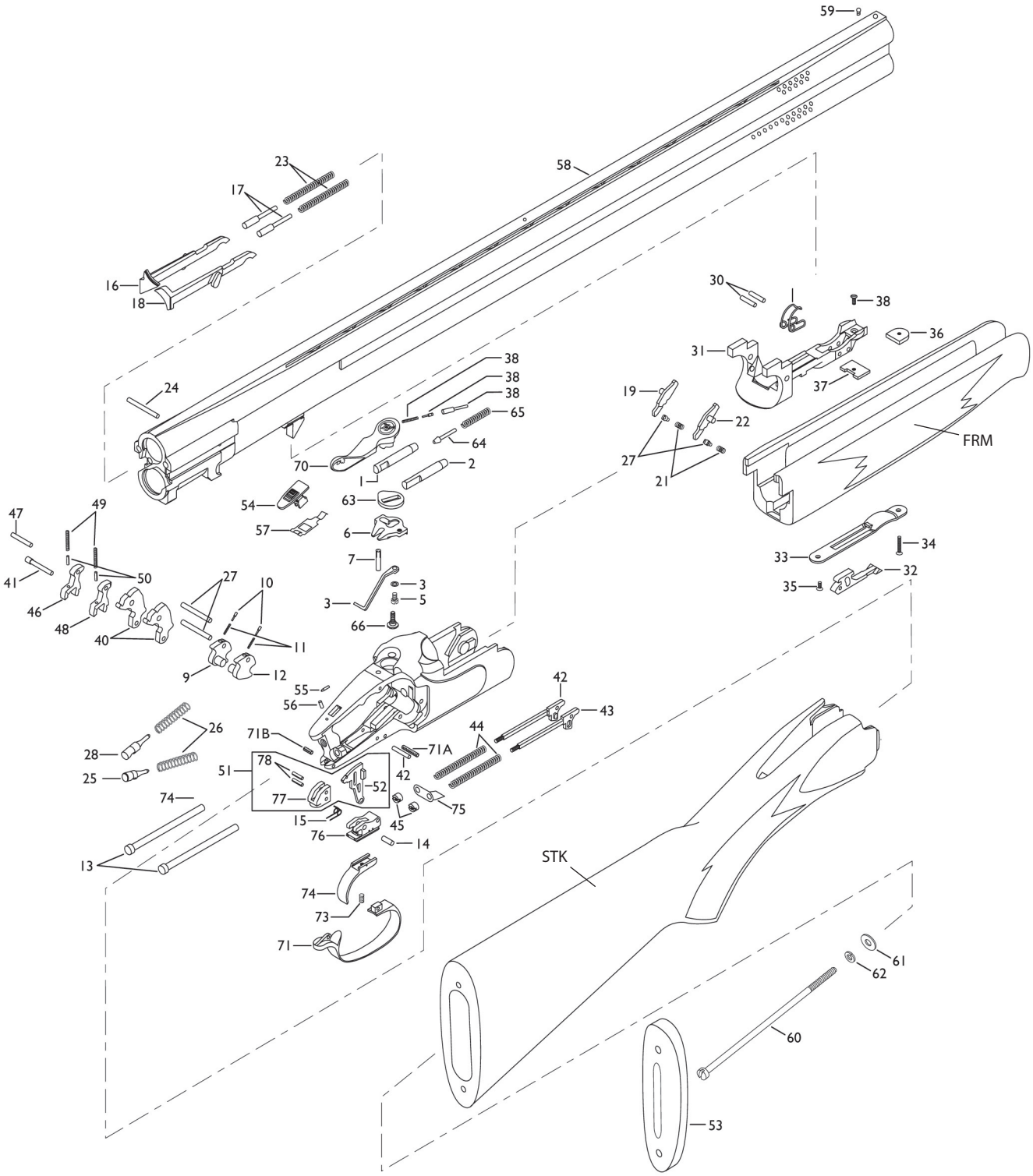
12 ga